LACELA

Product:Die Grinder Art.No.202516

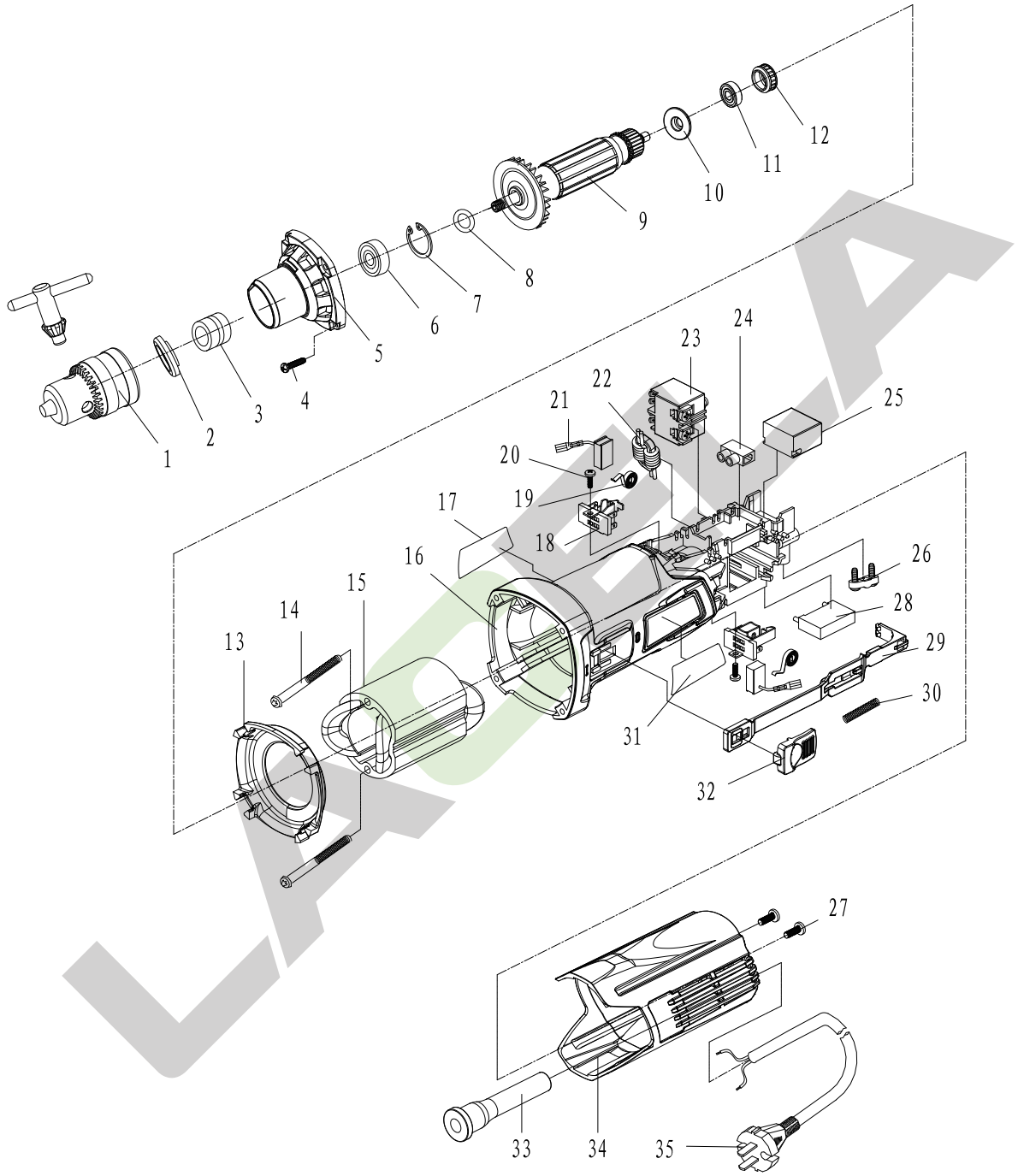

Version No.	D	Enable Time	2022.9

LACELA

Product: Die Grinder Art.No.202516

No.	Part Name(Chinese)	Part Name(English)	Code	Qty	No.	Part Name(Chinese)	Part Name(English)	Code	Qty
1	钻夹头	Drill Chuck	10304001024	1					
2	防尘盖	Dust Cover	10401002047	1					
3	隔套	Spacer Bush	10306002004	1					
4	自攻螺钉ST4×16	Screw ST4×16	30202022	4					
5	头壳	Gear Box	10201004230	1					
6	轴承6000	Bearing 6000	30103142	1					
7	孔用弹性挡圈26	Circlip for Hole 26	30302016	1					
8	平垫片16×10.2×0.3	Flat Washer 16×10.2×0.3	30403019	1					
9	转子	Armature	10502001225	1					
10	爬电挡圈	Insulation Washer	10101006004	1					
11	轴承607	Bearing 607	30103042	1					
12	轴承衬套	Bearing Sleeve	10102002009	1					
13	挡风圈	Air Deflector	10101005051	1					
14	自攻螺钉ST4×65	Screw ST4×65	30202050	2					
15	定子	Stator	10501001208	1					
16	机壳	Housing	10101001355	1					
17	铭牌	Mameplate	20302007607	1					
18	刷架	Brush Support	10606001083	2					
19	盘簧	Coil Spring	10303002004	2					
20	自攻螺钉ST3×8	Screw ST3×8	30202009	2					
21	碳刷	Carbon Brush	10605001065	2					
22	电感	Inductance	10604001034	1					
23	开关	Switch	10601001103	1					
24	塑料接线排3	Wiring Block 3	30802008	1					
25	调速器	Speed Controller	10601002009	1					
26	电缆压板	Cord Anchor	10101011123	1					
27	自攻螺钉ST4×14	Screw ST4×14	30202019	2					
28	电容	Capacitor	10603001001	1					
29	开关拉杆	Shaft for Switch	10101007177	1					
30	拉杆弹簧	Rod Spring	10303001121	1					
31	商标	Trademark	20402007120	1					
32	开关推钮	Push Button Switch	10101007086	1					
33	电缆护套	Cord Sleeve	10102001043	1					
34	后罩	Rear Cover	10101003104	1					
35	电源线2×0.75	Cord 2×0.75	10602006130	1					
Version No.		D			Enable Time		2022.9		

LACELA